Work Order ID 73449

Thursday, September 01, 2011 7:31:06 AM

Item ID: D3465-1 **Accept** **Setup Start**

Revision ID: **Stop**

Item Name: Washer

Start Date: 8/31/2011 **Start Qty:** 20.00 **Cust Item ID:**

Required Date: 9/16/2011 **Req'd Qty:** 20.00 **Customer:**

Reference:

Approvals: **Process Plan:** CL **Date:** 11/09/01 **Tooling:** _____ **Date:** _____ **Run Start**

QC: _____ **Date:** _____ **SPC (Y/N):** _____ **Date:** _____ **Stop**

Sequence ID/ Work Center ID	Operation Description	Set Up/ Run Hours	Tool ID	Tool #	Plan Code	Accept Qty	Reject Qty	Reject Number	Insp. Stamp
Draw Nbr	**Revision Nbr**								
D3465	Rev B								
100	Hardinge CNC LATHE SMALL	0.00				20	Ø		
Hardinge	**Memo**	0.00							
Hardinge CNC Lathe Small	1-TURN AS PER FOLIO FA602 & DWG D3465 ,□FOLIO REV: B □DWG REV: AA □2-DEBURR AS REQUIRED								
110	QC2- Inspect parts off machine FAI/FAIB	0.00				20	Ø		
QC	**Memo**	0.00							
Quality Control									
120	QC8- Inspect parts - second check	0.00				20	Ø		
QC	**Memo**	0.00							
Quality Control									

mk 11/09/19 SA 11/9/19

mk 11/09/19 SA 11/9/19

RQ 11.9.19

Dart Aerospace Ltd

W/O:		WORK ORDER CHANGES					
DATE	STEP	PROCEDURE CHANGE	By	Date	Qty	Approval Chief Eng / Prod Mgr	Approval QC Inspector

Part No: _____ **PAR #:** _____ **Fault Category:** _____ **NCR:** Yes No **DQA:** _____ **Date:** _____

Resolution: _____ **Disposition:** _____ **QA: N/C Closed:** _____ **Date:** _____

NCR:		WORK ORDER NON-CONFORMANCE (NCR)						
DATE	STEP	Description of NC Section A	Corrective Action Section B			Verification Section C	Approval Chief Eng	Approval QC Inspector
			Initial Chief Eng	Action Description Chief Eng	Sign & Date			

NOTE: Date & initial all entries

H:\FORMS\Quality Assurance\approved QA\NCRWO RevE

Work Order ID 73449

Thursday, September 01, 2011 7:31:06 AM

Item ID: D3465-1 **Accept** **Setup Start**

Revision ID: **Stop**

Item Name: Washer

Start Date: 8/31/2011 **Start Qty:** 20.00 **Cust Item ID:**

Required Date: 9/16/2011 **Req'd Qty:** 20.00 **Customer:**

Reference:

Approvals: **Process Plan:** _____ **Date:** _____ **Tooling:** _____ **Date:** _____ **Run Start**

QC: _____ **Date:** _____ **SPC (Y/N):** _____ **Date:** _____ **Stop**

Sequence ID/ Work Center ID	Operation Description	Set Up/ Run Hours	Tool ID	Tool #	Plan Code	Accept Qty	Reject Qty	Reject Number	Insp. Stamp
130		0.00							
Small Fab	Small Fab					20	0		
Small Fab	**Memo**	0.00							
Small Fab	Deburr if necessary.								
140	QC5- Inspect part completeness to step on W/O	0.00							
QC	**Memo**	0.00							
Quality Control									
150	Identify as per dwg & Stock Location: S54	0.00							
Packaging	**Memo**	0.00							
Packaging									

4/19/19

4/AS

20x 11-09-2011

Dart Aerospace Ltd

W/O:		WORK ORDER CHANGES					
DATE	STEP	PROCEDURE CHANGE	By	Date	Qty	Approval Chief Eng / Prod Mgr	Approval QC Inspector

Part No: _____ **PAR #:** _____ **Fault Category:** _____ **NCR:** Yes No **DQA:** _____ **Date:** _____

Resolution: _____ **Disposition:** _____ **QA: N/C Closed:** _____ **Date:** _____

NCR:		WORK ORDER NON-CONFORMANCE (NCR)						
DATE	STEP	Description of NC Section A	Corrective Action Section B			Verification Section C	Approval Chief Eng	Approval QC Inspector
			Initial Chief Eng	Action Description Chief Eng	Sign & Date			

NOTE: Date & initial all entries

H:\fFORMS\Quality Assurance\approved QA\NCRWO RevE

Work Order ID 73449

Thursday, September 01, 2011 7:31:06 AM

Item ID: D3465-1 **Accept** **Setup Start**

Revision ID:

Item Name: Washer **Stop**

Start Date: 8/31/2011 **Start Qty:** 20.00 **Cust Item ID:**

Required Date: 9/16/2011 **Req'd Qty:** 20.00 **Customer:**

Reference:

Approvals: **Process Plan:** _____ **Date:** _____ **Tooling:** _____ **Date:** _____ **Run Start**

QC: _____ **Date:** _____ **SPC (Y/N):** _____ **Date:** _____ **Stop**

Sequence ID/ Work Center ID	Operation Description	Set Up/ Run Hours	Tool ID	Tool #	Plan Code	Accept Qty	Reject Qty	Reject Number	Insp. Stamp
160	QC21- Final Inspection - Work Order Release	0.00							11/9/20
QC Quality Control	**Memo**	0.00							

MF
11-09-20

Dart Aerospace Ltd

W/O:		WORK ORDER CHANGES					
DATE	STEP	PROCEDURE CHANGE	By	Date	Qty	Approval Chief Eng / Prod Mgr	Approval QC Inspector

Part No: _____ **PAR #:** _____ **Fault Category:** _____ **NCR:** Yes No **DQA:** _____ **Date:** _____

Resolution: _____ **Disposition:** _____ **QA: N/C Closed:** _____ **Date:** _____

NCR:		WORK ORDER NON-CONFORMANCE (NCR)						
DATE	STEP	Description of NC Section A	Corrective Action Section B			Verification Section C	Approval Chief Eng	Approval QC Inspector
			Initial Chief Eng	Action Description Chief Eng	Sign & Date			

NOTE: Date & initial all entries

H:\FORMS\Quality Assurance\approved QA\NCRWO RevE

Picklist Print

Thursday, September 01, 2011 7:31:03 AM

Work Order ID: 73449

Parent Item: D3465-1

Parent Item Name: Washer

Start Date: 8/31/2011 **Required Date:** 9/16/2011

Start Qty: 20.00 **Required Qty:** 20.00

Comments: IPP REV. A 05.11.18 NEW ISSUE EC

Component Item ID/ Item Name	Replacement Item ID	Mfg/ Purch	Bin Item	Primary Location	Last Location	Route Seq ID	Unit of Measure	Qty on Hand	Qty per Kit	Total Qty	Qty Issued	Date Issued	Status
M303R1.000 303 Round Bar 1.00		Purchased	No			100	f	34.5390	0.0218	0.458947			

Location	Loc Qty	Loc Code
MAT028	34.539	
116700	1.107	
117550	6.9	
117598	13.74	
118008	12.792	

Dart Aerospace Ltd

W/O:		WORK ORDER CHANGES					
DATE	STEP	PROCEDURE CHANGE	By	Date	Qty	Approval Chief Eng / Prod Mgr	Approval QC Inspector

Part No: _____ **PAR #:** _____ **Fault Category:** _____ **NCR:** Yes No **DQA:** _____ **Date:** _____

Resolution: _____ **Disposition:** _____ **QA: N/C Closed:** _____ **Date:** _____

NCR:		WORK ORDER NON-CONFORMANCE (NCR)						
DATE	STEP	Description of NC Section A	Corrective Action Section B			Verification Section C	Approval Chief Eng	Approval QC Inspector
			Initial Chief Eng	Action Description Chief Eng	Sign & Date			

NOTE: Date & initial all entries

H:\fFORMS\Quality Assurance\approved QA\NCRWO RevE

DART AEROSPACE LTD	Work Order:	7349
Description: Washer	Part Number:	D3465-1
Inspection Dwg: D3465 **Rev:** B		Page 1 of 1

FIRST ARTICLE INSPECTION CHECKLIST

[X] First Article [ ] Prototype

Drawing Dimension	Tolerance	Actual Dimension	Accept	Reject	Method of Inspection	Comments
Ø0.453	+0.006/-0.001	Ø.456	—		Vern ML-06	
Ø1.00	+0.010/-0.001	1.00	—		"	
0.125	+/-0.010	.124	—		"	

Measured by:		Audited by:		Prototype Approval:	N/A
Date:	11/09/19	Date:	11.9.19	Date:	N/A

Rev	Date	Change	Revised by	Approved
A	07.09.06	New Issue	KJ/JLM	

Dart Aerospace Ltd

W/O:		WORK ORDER CHANGES					
DATE	STEP	PROCEDURE CHANGE	By	Date	Qty	Approval Chief Eng / Prod Mgr	Approval QC Inspector

Part No: _____ **PAR #:** _____ **Fault Category:** _____ **NCR:** Yes No **DQA:** _____ **Date:** _____

Resolution: _____ **Disposition:** _____ **QA: N/C Closed:** _____ **Date:** _____

NCR:		WORK ORDER NON-CONFORMANCE (NCR)						
DATE	STEP	Description of NC Section A	Corrective Action Section B			Verification Section C	Approval Chief Eng	Approval QC Inspector
			Initial Chief Eng	Action Description Chief Eng	Sign & Date			

NOTE: Date & initial all entries

H:\fFORMS\Quality Assurance\approved QA\NCRWO RevE

DESIGN	DRAWN BY	DART AEROSPACE LTD HAWKESBURY, ONTARIO, CANADA	
RF	RF		
CHECKED	APPROVED	DRAWING NO.	REV. B
		D3465	SHEET 1 OF 1
DATE		TITLE	SCALE
05.12.05		WASHER	2:1

A	05.09.02	NEW ISSUE
B	05.12.05	0.125 WAS 0.065

RELEASED
05.12.09

SHOP COPY
RETURN TO
ENGINEERING
UNCONTROLLED COPY
SUBJECT TO AMENDMENT
WITHOUT NOTICE
WORK ORDER
NO. 13449
11-09-16

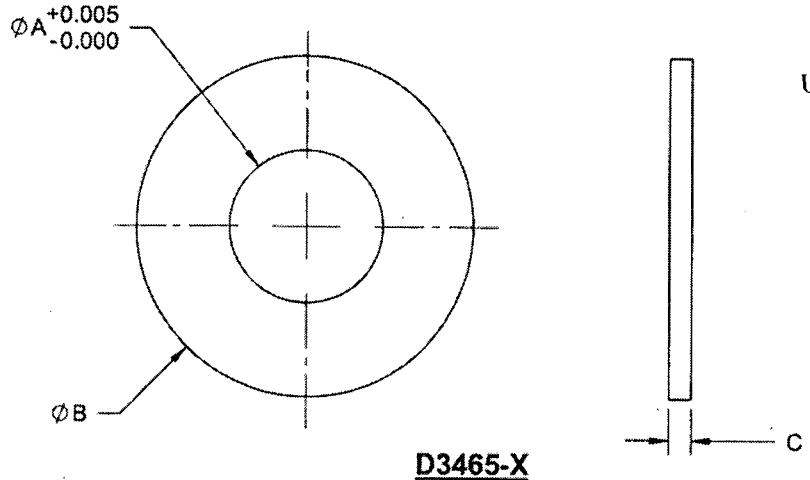

D3465-X

1) SPECIFICATION: **D3465-X WASHER**

DASH No.

WHERE 'X' IS THE SIZE PER THE FOLLOWING TABLE:

DASH No.	A (in)	B (in)	C (in)
-1	0.453	1.00	0.125

B

NOTES:

1) MATERIAL: AISI 303 SS ROUND BAR (REF. DART SPEC. M303R)
2) FINISH: NONE
3) IDENTIFY WITH P/N USING FINE POINT PERMANENT MARKER
4) TOLERANCES ARE PER DART QSI 018 UNLESS OTHERWISE NOTED
5) ALL DIMENSIONS ARE IN INCHES
6) BREAK ALL UNMARKED SHARP EDGES 0.005 TO 0.010

Dart Aerospace Ltd

W/O:		WORK ORDER CHANGES					
DATE	STEP	PROCEDURE CHANGE	By	Date	Qty	Approval Chief Eng / Prod Mgr	Approval QC Inspector

Part No: _____ **PAR #:** _____ **Fault Category:** _____ **NCR:** Yes No **DQA:** _____ **Date:** _____

Resolution: _____ **Disposition:** _____ **QA: N/C Closed:** _____ **Date:** _____

NCR:		WORK ORDER NON-CONFORMANCE (NCR)						
DATE	STEP	Description of NC Section A	Corrective Action Section B			Verification Section C	Approval Chief Eng	Approval QC Inspector
			Initial Chief Eng	Action Description Chief Eng	Sign & Date			

NOTE: Date & initial all entries

H:\fFORMS\Quality Assurance\approved QA\NCRWO RevE